Part Number: IB1011M10

Integra
TECHNOLOGIES, INC.

L-Band Avionics Transistor

The high power pulsed avionics transistor part number IB1011M10 is designed for L-Band avionics systems operating at 1030 and 1090 MHz. While operating in class C mode under simple mode S pulse burst conditions at V_{CC} = 50V, this common base device supplies a minimum of 10 watts of peak pulse power. It utilizes a low loss internal input impedance matching structure to yield maximum device gain and to ease the implementation of external matching circuitry. The new generation bipolar transistor geometry utilizes a gold metallization system to achieve maximum reliability. Emitter ballast resistance is incorporated on the active cell for optimum thermal distribution and maximum reliability. All devices are 100% screened for large signal RF parameters.

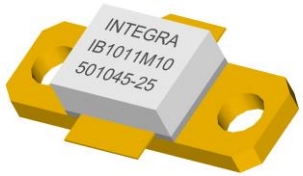

Silicon Bipolar
- Ultra-high f_T

Class C Operation
- High Efficiency

Common Base Configuration
- Single Power Supply

Gold Metal
- Maximum Reliability

Emitter Ballasting
- Optimum Thermal Distribution

Internal Impedance Matching
- Ease of Use
- Ultra-low Loss Design

Be0 Package
- Unmatched Thermal Reliability

RF Test Fixture
- Broadband
- Matched to 50Ω
- Long-term Correlation
- 100% Device RF Screening
- No External Tuning Allowed
- Micro-strip structure on soft pc board with dielectric constant 10.2

TYPICAL DATA TYPICAL DATA TYPICAL DATA TYPICAL DATA

Device	Freq (MHz)	V_{CC} (V)	P_{IN} (W)	IRL (dB)	P_{OUT} (W)	G_P (dB)	I_C (A)	η_C (%)	Droop (dB)
D34894-10	1030	50	0.6	15	11.8	12.94	0.45	52.4	0

Pulse Format = Mode S – 128x(0.5us ON, 0.5us off), overall duty cycle 1%

Power measurements made using Boonton 4500 Peak Power Analyzer

www.integratech.com
PHONE: 310-606-0855
FAX: 310-606-0865

INTEGRA TECHNOLOGIES, INC.
321 CORAL CIRCLE
EL SEGUNDO, CA 90245-4620

MAXIMUM RATINGS

Screen	Parameter	Symbol	Min	Max	Units	Test Conditions
BD	Collector-Emitter Voltage	V_{CES}	--	85	V	--
BD	Emitter-Base Voltage	V_{EBO}	--	2	V	--
BD	Storage Temperature Range	T_{STG}	-55	+150	°C	--
BD	Operating Junction Temperature Range	T_J	-55	+200	°C	--
Note	Screen 'BD' = parameter qualified By Design.					

THERMAL CHARACTERISTICS

Screen	Parameter	Symbol	Min	Max	Units	Test Conditions
BD	Thermal Resistance	$R_{TH(JC)}$	--	TBD	°C/W	V_{CC}=50V, Pulse format=Mode S - T_F=25±5°C, P_{IN}=0.6W, N_C=48%
Note	Screen 'BD' = parameter qualified By Design.					

PROCESSING SPECIFICATIONS

Screen	Parameter	Symbol	Min	Max	Units	Test Conditions
100%	DC Wafer Probe	--	--	--	--	Per Integra specification.
Q1	Wafer DC and RF Qualification	--	--	--	--	Per Integra specification.
LM	Wire Bond Strength	--	--	--	--	Line monitor per Integra specification.
100%	Pre-cap visual inspection	--	--	--	--	Per Integra specification
100%	Gross leak test	--	--	--	--	MIL-STD-750D, Method 1071, Test Condition C
Note	Screen 'Q1' = parameter is qualified by assembly and test of 3 pieces minimum per wafer.					
Note	Screen 'LM' = parameter is qualified by assembly line monitor.					

DC ELECTRICAL CHARACTERISTICS

Screen	Parameter	Symbol	Min	Max	Units	Test Conditions
100%	Collector-Emitter Breakdown Voltage	BV_{CES}	85	--	V	I_C = 10mA, V_{BE} = 0V, T_F = 25±5°C.
100%	Zero Base Voltage Collector Leakage Current	I_{CES}	--	100	uA	V_{CE} = 50V, V_{BE} = 0V, T_F = 25±5°C.
100%	DC Current Gain	H_{FE}	10	100	--	V_{CE} = 5V, I_C = 0.1A, T_F = 25±5°C.

www.integratech.com
PHONE: 310-606-0855
FAX: 310-606-0865

INTEGRA TECHNOLOGIES, INC.
321 CORAL CIRCLE
EL SEGUNDO, CA 90245-4620

RF ELECTRICAL CHARACTERISTICS

Screen	Parameter	Symbol	Min	Max	Units	Test Conditions
100%	Input Return Loss	IRL	10	--	dB	V_{CC}=50V, P_{IN}=0.6W, Pulse = Note 2, T_F=25±5°C, F=F1.
BD	Maximum Overdrive	$P_{IN(MAX)}$		0.8	W	V_{CC}=50V, Pulse = Note 2, T_F=25±5°C, F=F1.
100%	Power Gain	G_P	12.22	13.72	dB	V_{CC}=50V, P_{IN}=0.6W, Pulse = Note 2, TF=25±5º C, F=F1
100%	Collector Efficiency ($P_O/I_C/V_{CC}$)	N_C	48	--	%	V_{CC}=50V, P_{IN}=0.6W, Pulse = Note 2, T_F=25±5°C, F=F1.
100%	Output Power	Pout	10.0	14.1	W	V_{CC}=50V, P_{IN}=0.6W, Pulse = Note 2, T_F=25±5°C, F=F1.
100%	Pulse Amplitude Droop	D	-0.5	0.5	dB	V_{CC}=50V, P_{IN}=0.6W, Pulse = Note 2, T_F=25±5°C, F=F1.
100%	Stability into 1.5:1 VSWR	VSWR-S	--	--	--	V_{CC}=50V, P_{IN}=0.6W, Pulse = Note 2, T_F=25±5°C, F=F1. Rotate 1.5:1 output VSWR through 360° phase. No oscillatory or pulse break-up characteristics allowed on detected output pulse.
100%	Load Mismatch Tolerance	LMT	3:1	--	--	V_{CC}=50V, P_{IN}=0.6W, Pulse = Note 2, T_F=25±5°C, F=F1. Rotate 3:1 output VSWR through 360° phase. Survival.
BD	Pulse Risetime	RT	--	80	ns	V_{CC}=50V, P_{IN}=0.6W, Pulse = Note 2, T_F=25±5°C, F=F1. Measure between 10% and 90% detected power points.
Note 1	F1 = 1030 MHz.					
Note 2	Pulse format = Mode S - (128 x (0.5us ON, 0.5us off), 1%)					
Note 3	T_F = Device flange temperature.					
Note 4	Screen 'BD' = parameter qualified By Design.					

RF TEST FIXTURE IMPEDANCE CHARACTERISTICS

Frequency (MHz)	Z_{IF} (Ω)	Z_{OF} (Ω)
1030	5.1 –j12.9	9.5 +j20.0
Impedance Definition	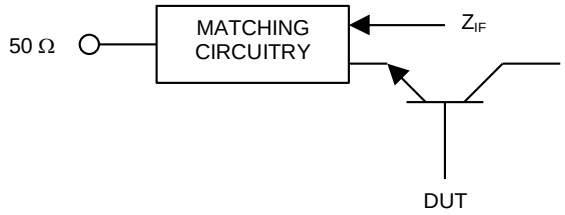	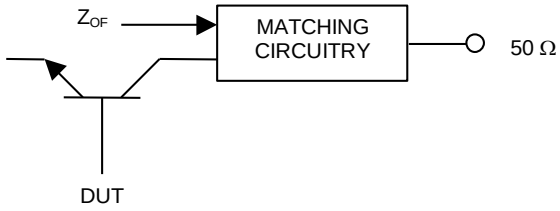

www.integratech.com
PHONE: 310-606-0855
FAX: 310-606-0865

INTEGRA TECHNOLOGIES, INC.
321 CORAL CIRCLE
EL SEGUNDO, CA 90245-4620

PACKAGE DIMENSIONAL OUTLINE DRAWING

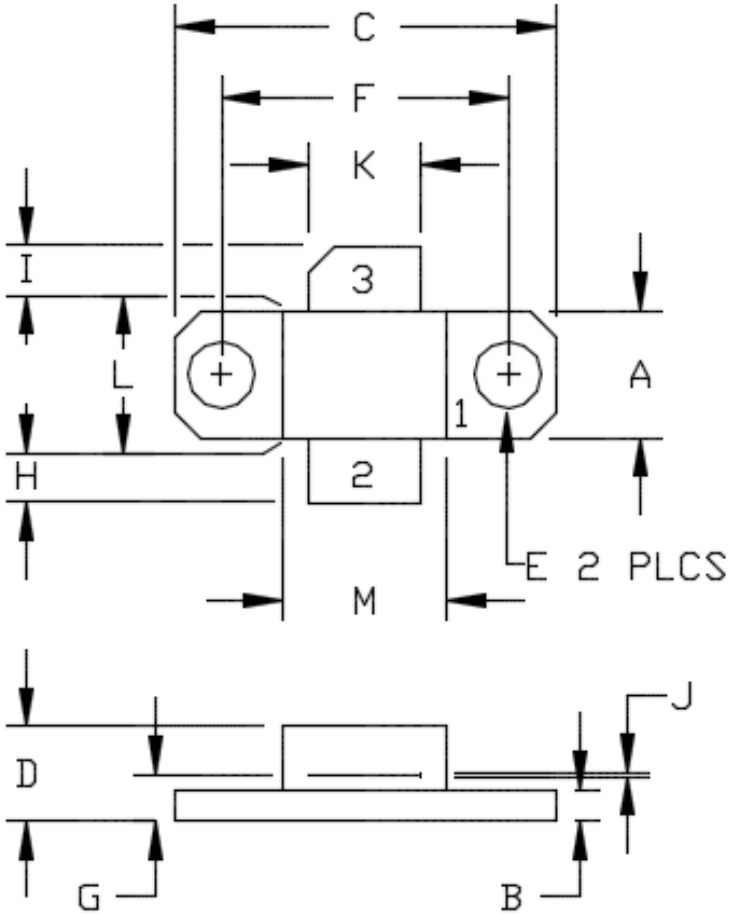

DIM	INCHES MIN	INCHES MAX	MILLIMETERS MIN	MILLIMETERS MAX
A	0.243	0.253	6.17	6.43
B	0.055	0.065	1.40	1.65
C	0.739	0.749	18.77	19.02
D	0.165	0.185	4.19	4.70
E	0.125	0.135	3.18	3.43
F	0.555	0.565	14.10	14.35
G	0.082	0.092	2.08	2.34
H	0.075	0.105	1.90	2.67
I	0.075	0.105	1.90	2.67
J	0.004	0.006	0.10	0.15
K	0.215	0.225	5.46	5.72
L	0.245	0.255	6.22	6.48
M	0.315	0.325	8.00	8.26

PIN SCHEDULE	
1	BASE
2	EMITTER
3	COLLECTOR

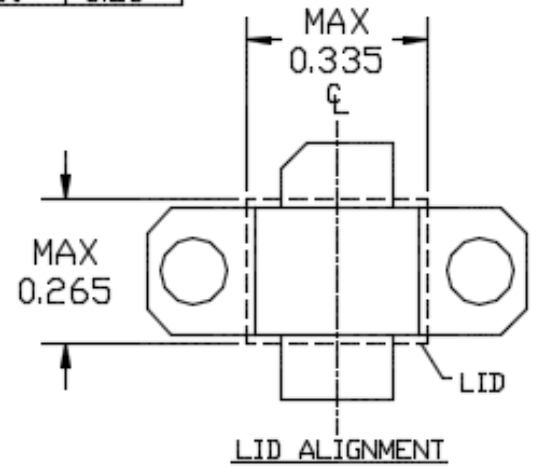

www.integratech.com
PHONE: 310-606-0855
FAX: 310-606-0865

INTEGRA TECHNOLOGIES, INC.
321 CORAL CIRCLE
EL SEGUNDO, CA 90245-4620

RF TEST FIXTURE

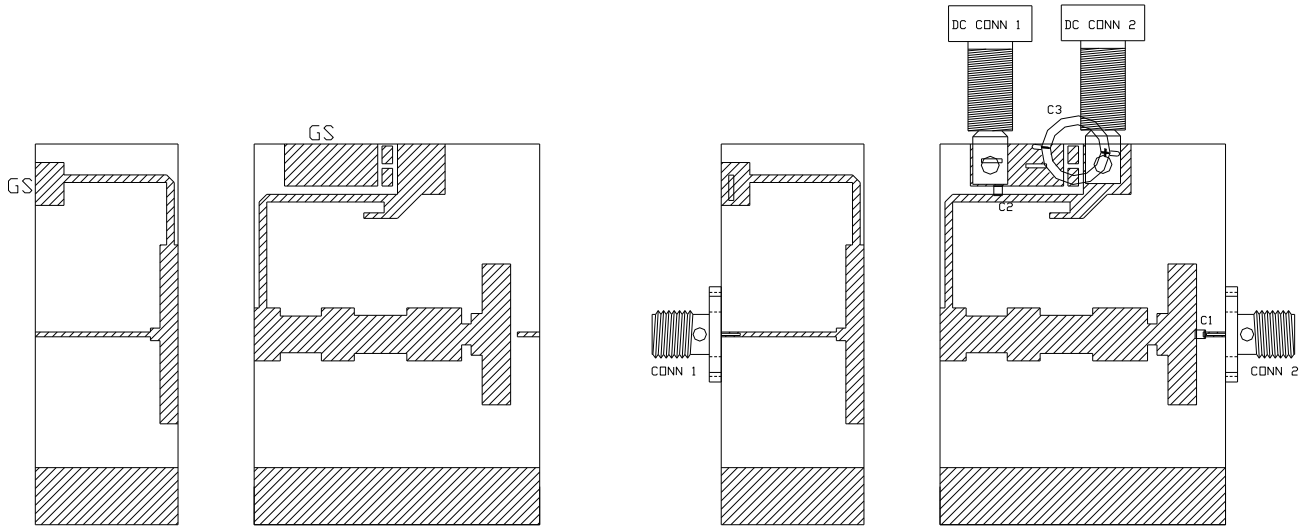

COMPONENT	DESCRIPTION
DUT	TRANSISTOR #IB1011M10, MOUNT HARD TO THE RIGHT
PC BOARD	ROGERS #RO6010 IE/1E .025"
C1, C2	CHIP CAPACITOR ATC100A-82 pF
C3	ELECTROLYTIC CAPACITOR 68uF / 63V
C4	ELECTROLYTIC CAPACITOR 4700uF/50V
GS (3 PLACES)	GROUND SHIM, COPPER, TH=0.001"
CONN 1, CONN 2 (2 PLACES)	SMA CONNECTOR, OS #2052-5636-02
INPUT PC BOARD CARRIER	2 INCH BRASS-02 (0.75")
OUTPUT PC BOARD CARRIER	2 INCH BRASS-05 (1.5")
TRANSISTOR CARRIER	2 INCH COPPER-01 (P32)
TRANSISTOR CLAMP	NORLY CLAMP-01 (P32)
ALUMINUM HEATSINK	2 INCH HEATSINK-11
DC CONN1	BANANA JACK, BLACK
DC CONN 2	BANANA JACK, RED
NOTE	FIXTURE HARDWARE DRAWINGS AVAILABLE ON REQUEST

ASSEMBLY AND PARTS LIST

www.integratech.com
PHONE: 310-606-0855
FAX: 310-606-0865

INTEGRA TECHNOLOGIES, INC.
321 CORAL CIRCLE
EL SEGUNDO, CA 90245-4620

Integra TECHNOLOGIES, INC.

RF TEST FIXTURE

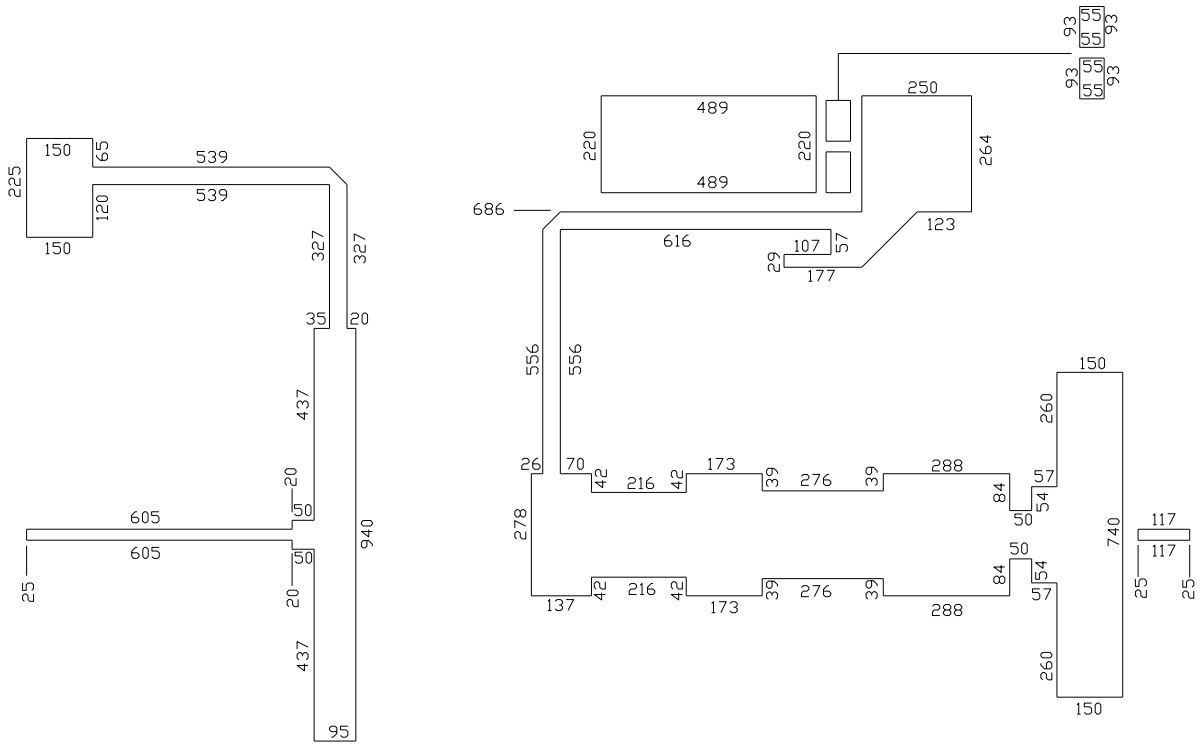

CIRCUIT DIMENSIONS

www.integratech.com
PHONE: 310-606-0855
FAX: 310-606-0865

INTEGRA TECHNOLOGIES, INC.
321 CORAL CIRCLE
EL SEGUNDO, CA 90245-4620

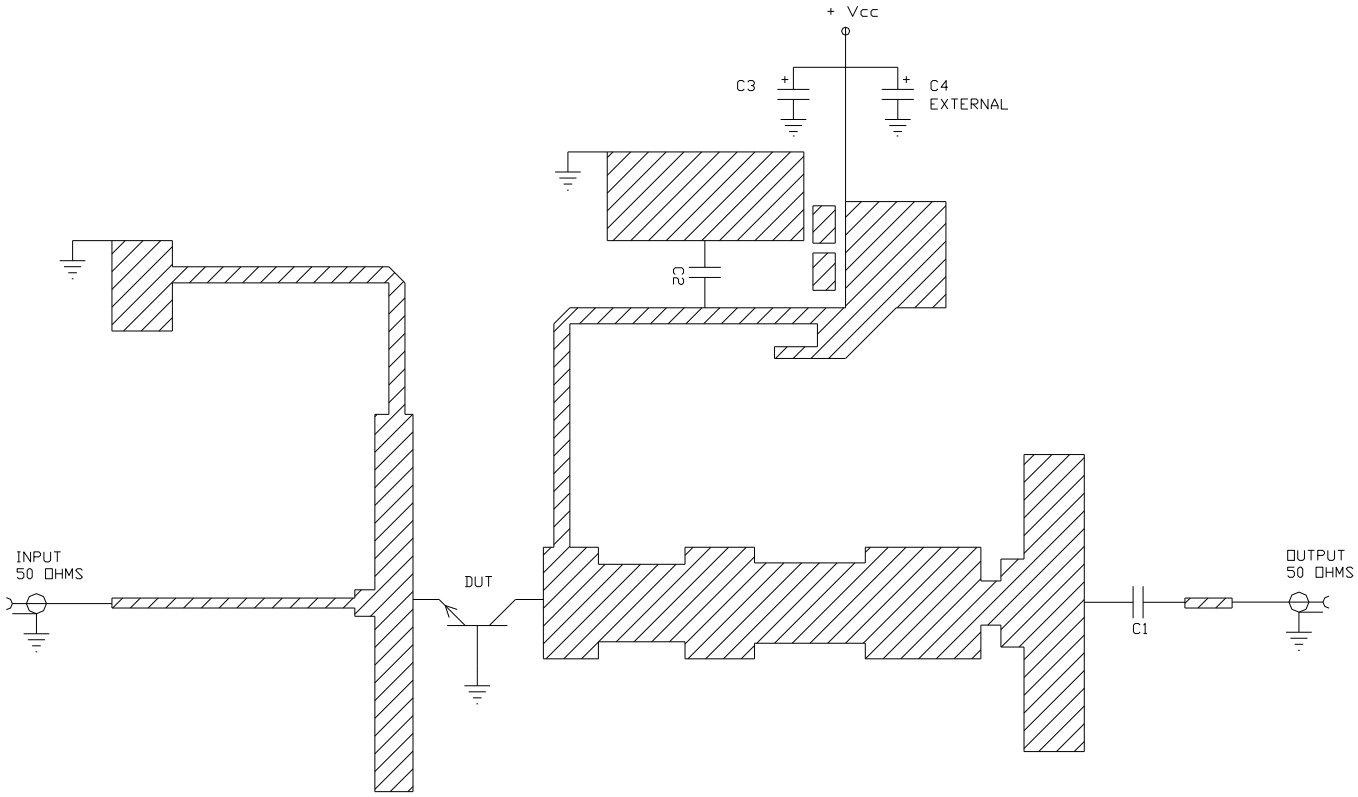

ELECTRICAL SCHEMATIC

www.integratech.com
PHONE: 310-606-0855
FAX: 310-606-0865

INTEGRA TECHNOLOGIES, INC.
321 CORAL CIRCLE
EL SEGUNDO, CA 90245-4620

DEFINITIONS

Data Sheet Status	
Proposed Specification	This data sheet contains proposed specifications.
Preliminary Specification	This data sheet contains specifications based on preliminary measurements and data.
Product Specification	This data sheet contains final product specifications.

Maximum Ratings

Stress above one or more of the maximum ratings may cause permanent damage to the device. These are maximum ratings only. Operation of the device at these or at any other conditions above those given in the characteristics sections of the specification is not implied. Exposure to maximum values for extended periods of time may affect device reliability.

WARNING

Product and environmental safety - toxic materials

This product contains beryllium oxide. The product is entirely safe provided that the BeO base is not damaged. All persons who handle, use or dispose of this product should be aware of its nature and of the necessary safety precautions. After use, dispose of as chemical or special waste according to the regulations applying at the location of the user. It must never be thrown out with general or domestic waste.

DISCLAIMER

Integra Technologies Inc. reserves the right to make changes without further notice to any products herein. Integra Technologies Inc. makes no warranty, representation or guarantee regarding the suitability of its products for any particular purpose, nor does Integra Technologies Inc. assume any liability arising out of the application or use of any product or circuit, and specifically disclaims any and all liability, including without limitation consequential or incidental damages. Integra Technologies Inc. products are not designed for use in life support appliances, devices, or systems where malfunction of these products can reasonably be expected to result in personal injury. Integra Technologies Inc. customers using or selling these products for use in such applications do so at their own risk and agree to fully indemnify Integra Technologies Inc. for any damages resulting from such improper use or sale.

www.integratech.com
PHONE: 310-606-0855
FAX: 310-606-0865

INTEGRA TECHNOLOGIES, INC.
321 CORAL CIRCLE
EL SEGUNDO, CA 90245-4620